THE INFORMATION DISCLOSED HEREIN WAS ORIGINATED BY AND IS THE PROPERTY OF BIRK AEROSYSTEMS CORPORATION. BIRK AEROSYSTEMS CORPORATION RESERVES ALL PATENT, PROPRIETARY, DESIGN, USE, MANUFACTURING AND REPRODUCTION RIGHTS THERETO.

REV STATUS OF SHEET							
	REV	–					
	SHEET	1					

REVISION

ZONE	REV	DESCRIPTION	DATE	APPROVED
	–	SEE DCN 2215.	02-11-26	BLB

NOTE(S):

1. BREAK AND DEBURR ALL SHARP EDGES. SURFACE FINISH TO BE 63 OR BETTER.
2. FINISH:

   -1: BARE

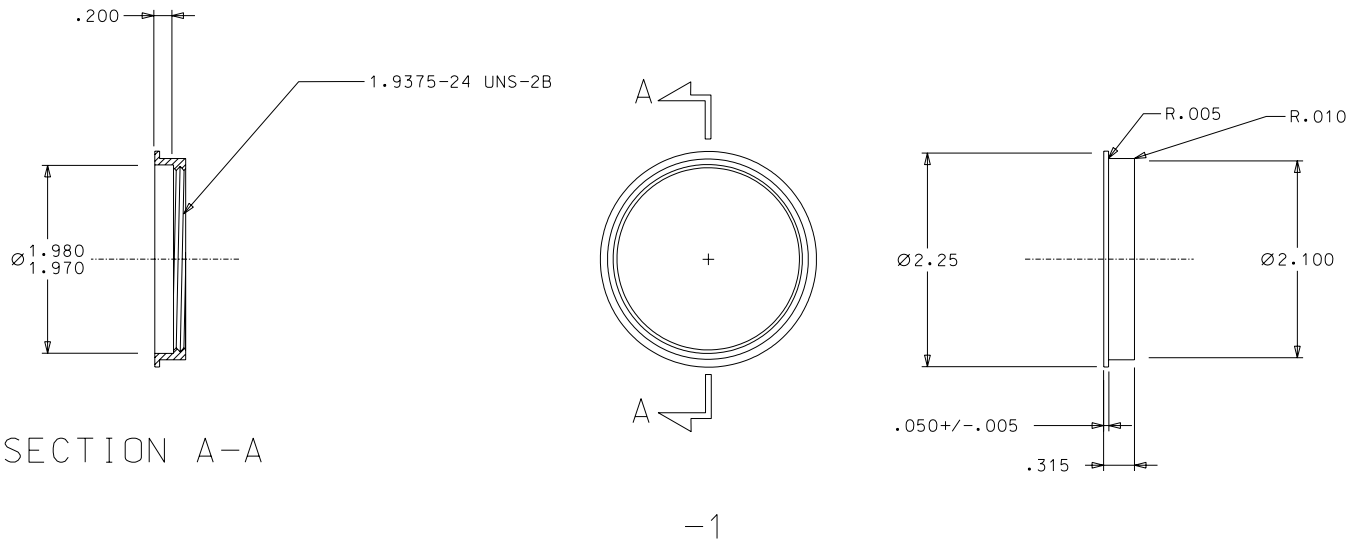

QTY REQD		CAGE CODE	PART OR IDENTIFYING NO.	NOMENCLATURE OR DESCRIPTION	MATERIAL SPECIFICATION	ITEM NO.
			-1	MOUNTING NUT	AL ALY 6061-T6511	

PARTS LIST

NEXT ASSY	USED ON
APPLICATION	

UNLESS OTHERWISE SPECIFIED DIMENSIONS ARE IN INCHES
TOLERANCES ARE:
FRACTIONS ±1/32 DECIMALS .XX ±.03 .XXX ±.010 ANGLES ±1/2°

DO NOT SCALE DRAWING

MATERIAL: SEE PL

FINISH: SEE NOTE(S)

TREATMENT

CONTRACT NO.

APPROVALS		DATE
DRAWN	BLB	02-11-26
CHECKED	LLG	02-11-26
ENGR	BLB	02-11-26
ISSUED	CLB	02-11-26

FILE NO. 8034/PV

BIRK AEROSYSTEMS CORPORATION
GARDEN GROVE, CALIFORNIA 92843

TITLE: MOUNTING NUT

SIZE	CAGE CODE	DWG NO.	REV.
C	1XE65	8034	–

SCALE 1/1 | WT. | SHEET 1 OF 1

DWG NO. 8034 | SH 1 | REV –