THE INFORMATION DISCLOSED HEREIN WAS ORIGINATED BY AND IS THE PROPERTY OF BIRK AEROSYSTEMS CORPORATION. BIRK AEROSYSTEMS CORPORATION RESERVES ALL PATENT, PROPRIETARY, DESIGN, USE, MANUFACTURING AND REPRODUCTION RIGHTS THERETO.

REV STATUS OF SHEET	REV	–		
	SHEET	1		

REVISION

ZONE	REV	DESCRIPTION	DATE	APPROVED
	–	SEE DCN 4503.	10-08-04	BLB

NOTE(S):

1. AIR FLOW IN FULLY OPENED POSITION: 2.5 +/-0.5 SCFM AT 3.0 INCHES H2O PRESSURE.
2. LEAKAGE IN FULLY CLOSED POSITION: 0.2 CFM MAX. AT 20.0 INCHES H2O PRESSURE.
3. FINISH:
   BALL, FLANGE, NOZZLE COLLAR:
   -1: FINE SATIN CLEAR ANODIZE PER MIL-A-8625 TYPE II, CLASS 1.
   NICKEL ACETATE SEAL
   -2: MATTE TEXTURE WITH CLEAR ANODIZE PER MIL-A-8625 TYPE II, CLASS 1.
   NICKEL ACETATE SEAL
4. TORQUE TO ROTATE NOZZLE: 1.00 +.00/-.75 IN-LB
5. TORQUE TO MOVE BALL IN FLANGE: 1.0 IN-LB MINIMUM. FORCE TO ROTATE THE BALL FROM CENTER POSITION SHALL BE LESS THAT 5.5 LBS APPLIED AT THE NOZZLE ORIFICE PERPENDICULAR TO THE NOZZLE DIRECTION.
6. ACCEPTANCE TEST PER ATP4173.
7. PERMANENTLY IDENTIFY WITH THE FOLLOWING:
   BAC
   PART NUMBER
   MFG DATE CODE (YYWW)

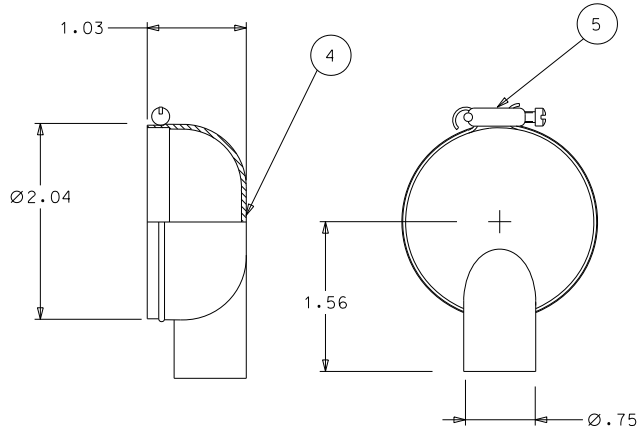

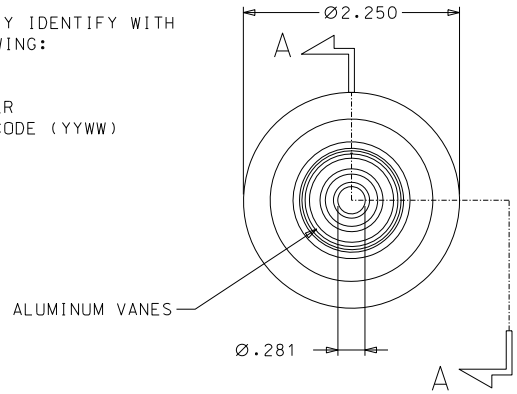

-1, -2

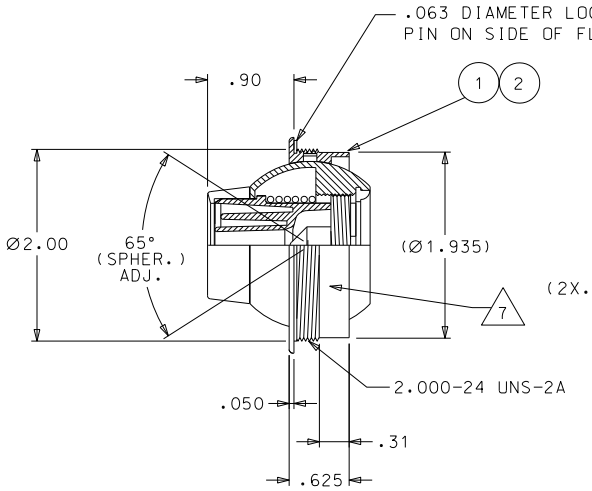

SECTION A-A

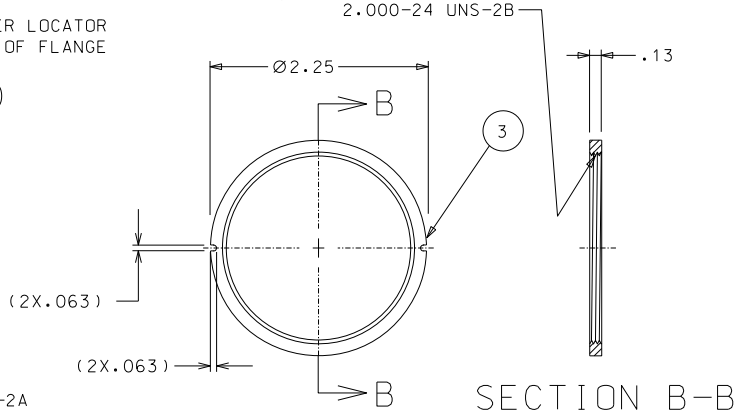

SECTION B-B

SECURING NUT AND PLENUM CAP SHOWN REMOVED FOR CLARITY

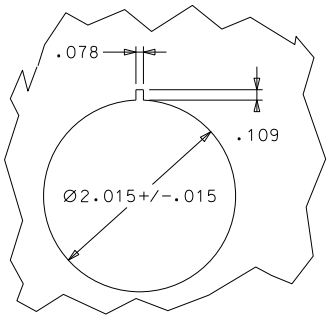

RECOMMENDED MOUNTING HOLE
PANEL THICKNESS: .040-.125

QTY REQD -2	QTY REQD -1	CAGE CODE	PART OR IDENTIFYING NO.	NOMENCLATURE OR DESCRIPTION	MATERIAL SPECIFICATION	ITEM NO.
1	1		CA3785-24	CLAMP ASSY	ALUMINUM ALLOY/SST/CRES	5
1	1		PC7070-1	PLENMUM CAP	LEXAN 940 (POLYCARBONATE)	4
1	1		MN8049-1	MOUNTING NUT	ALUMINUM ALLOY	3
1			4173-2	AIR VALVE	ALUMINUM ALLOY/POLYCARBONATE	2
	1		4173-1	AIR VALVE	ALUMINUM ALLOY/POLYCARBONATE	1

PARTS LIST

NEXT ASSY	USED ON
APPLICATION	

UNLESS OTHERWISE SPECIFIED DIMENSIONS ARE IN INCHES
TOLERANCES ARE:
FRACTIONS ±1/32 DECIMALS .XX ±.03 .XXX ±.010 ANGLES ±1/2°
DO NOT SCALE DRAWING
MATERIAL SEE PL
FINISH SEE NOTE(S)
TREATMENT

CONTRACT NO.

APPROVALS		DATE
DRAWN	JMB	10-08-04
CHECKED	BLB	10-08-04
ENGR	JMB	10-08-04
ISSUED	CLB	10-08-04
FILE NO.	AV4173/PV	

BIRK AEROSYSTEMS CORPORATION
GARDEN GROVE, CALIFORNIA 92843

TITLE AIR VALVE, POPPET TYPE

SIZE	CAGE CODE	DWG NO.	REV.
C	1XE65	AV4173	–

SCALE 1/1 WT. SHEET 1 OF 1

DWG NO. AV4173 SH 1 REV –